Handle Lock

2602

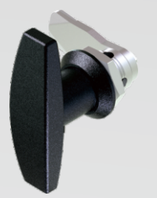

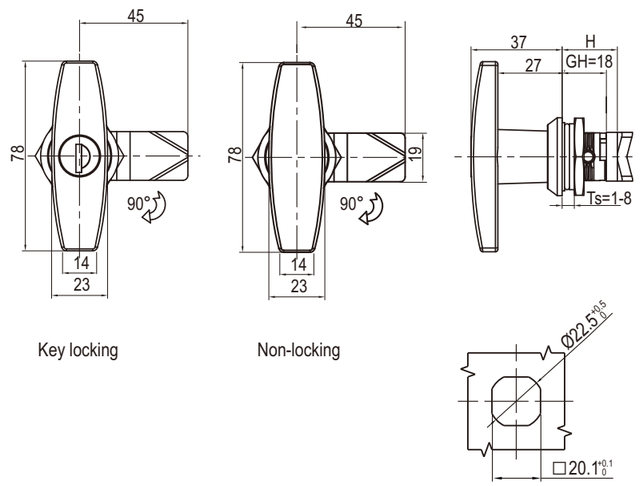

Panel Cutout

Accessories ref. to page #
1. CAM ref. to page 9A-001

Remark

1. Key different on request.
2. CH751 key code on request
3. Keyed YK333

Zinc die housing and handle; m.s. zinc plated cam

	Black Textured Powder Coated	Bright Chrome	SUS 632
Key Locking	2602-20-40	2602-20-60	2602-20-632
Non-locking	2602-00-40	2602-00-60	2602-00-632

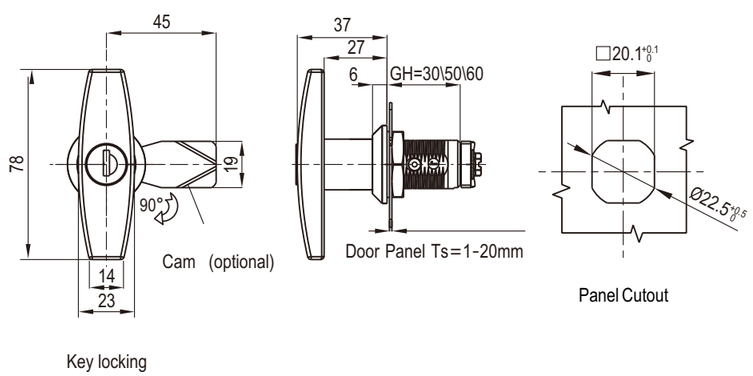

Panel Cutout

Zinc die handle and housing black textured powder coated or bright chrome; m.s. zinc plated cam

	GH=30		GH=50		GH=60	
Insert type	Bright Chrome	Black Textured Powder Coated	Bright Chrome	Black Textured Powder Coated	Bright Chrome	Black Textured Powder Coated
Key Locking	2602-60220-60	2602-60220-40	2602-100220-60	2602-100220-40	2602-120220-60	2602-120220-40
Non-locking	2602-60200-60	2602-60200-40	2602-100200-60	2602-100200-40	2602-120200-60	2602-120200-40

Accessories ref. to page #
1. CAM ref. to page 9A-001
2. Keyed Yk333

Handle Lock

2620

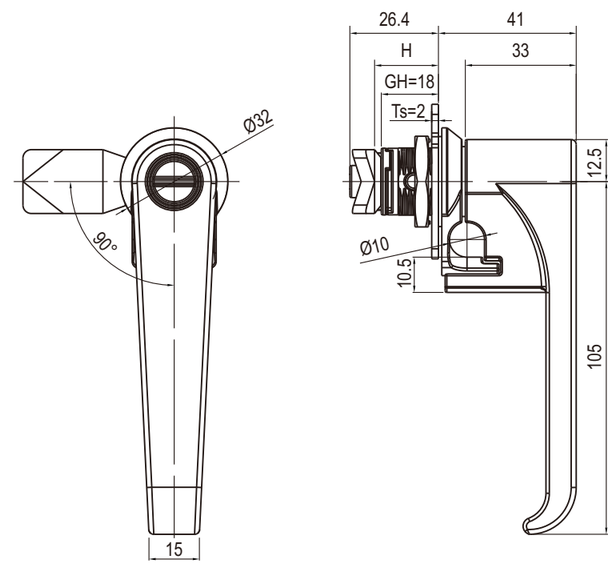

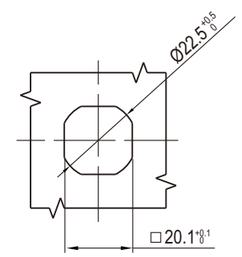

Panel Cutout

Zinc die housing and handle; m.s. zinc plated cam

	Black Textured Powder Coated	Textured Chrome Plated
Key Locking	2620-20-40	2620-20-158
Non-locking	2620-00-40	2620-00-158
2X4 Slot coin proof insert	2620-248-40	2620-248-158

Accessories ref. to page #
1. CAM ref. to page 9A-001

Remark
1. Key different on request
2. CH751 key code on request
3. Insert is without spring loaded

4. Keyed YK333